SPECIFICATIONS

Swish 1120 (With Square Basket Wastes)

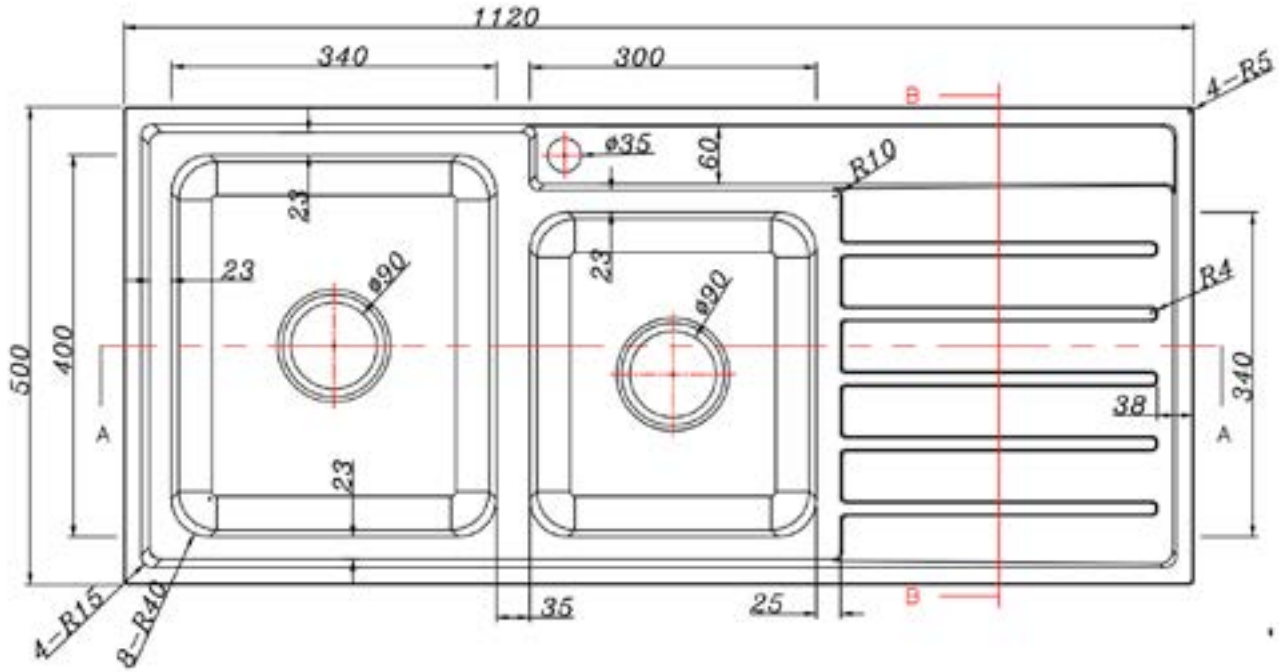

sales@precero.com.au
07 4728 7951
6/60 Keane Street, Currajong QLD 4212
www.precero.com.au

Precero
Luxurious & Affordable Bathroomware